Simple Assembly Instructions

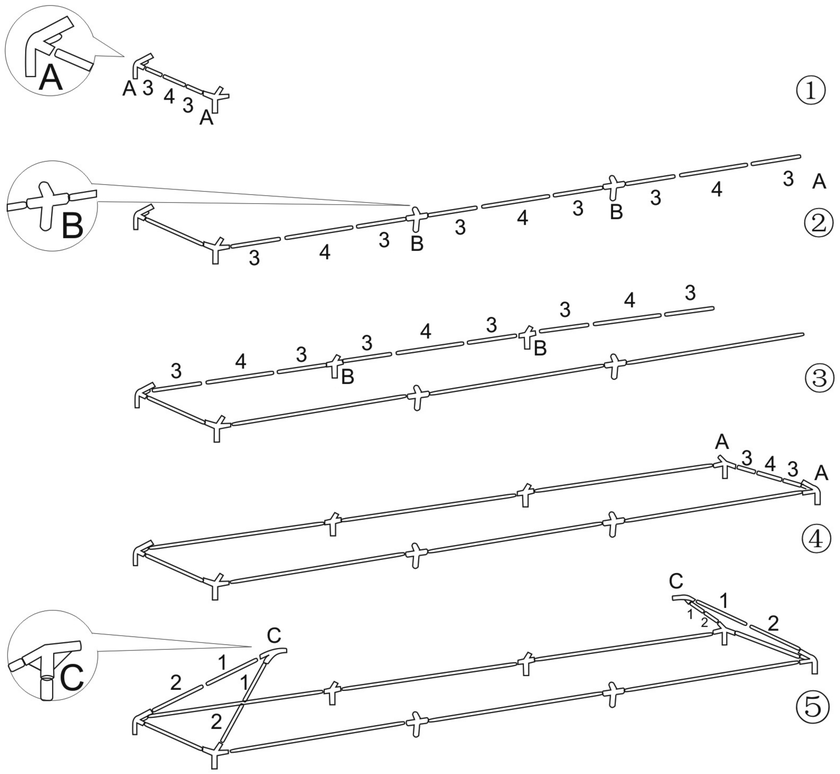

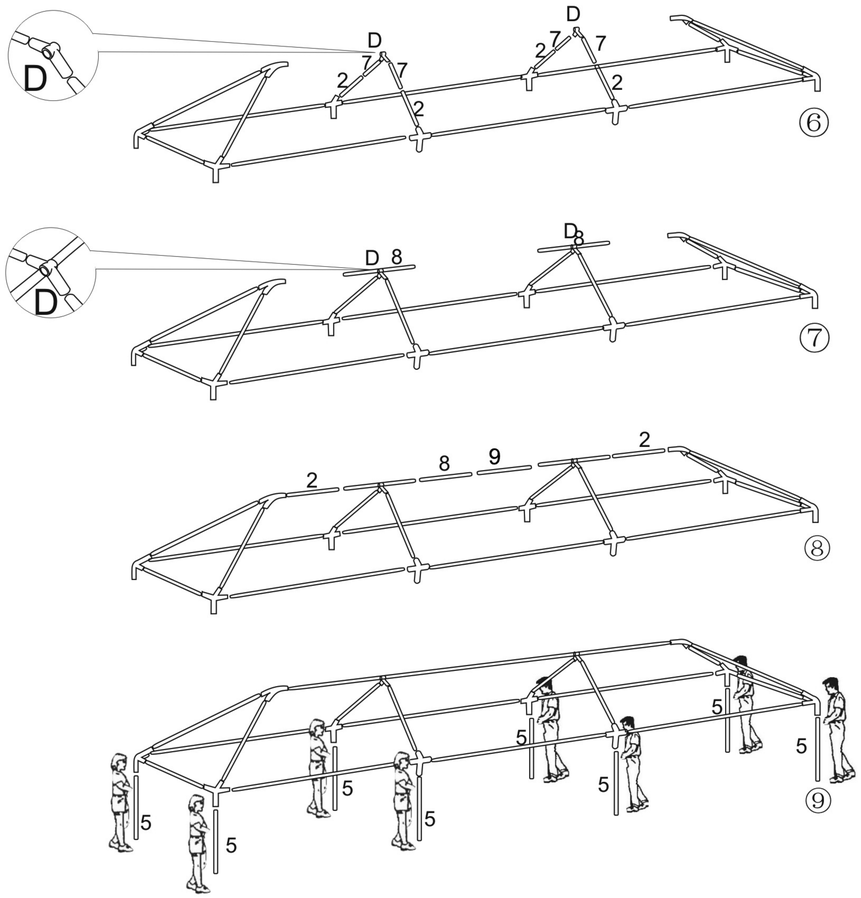

MODEL: MQ380
BATCH: PR3902

1			4 PCS
2			10PCS
3			16PCS
4			8 PCS
5			8 PCS
6			8 PCS
7			4 PCS
8			3 PCS
9			1 PCS
A	4 PCS		8 PCS
B	4 PCS		16PCS
C	2 PCS		
D	2 PCS		
E	8 PCS		
			1 PCS
			5 PCS

LENOXX

www.lenoxx.com.au

1300 666 848

LenoxxElectronics

LenoxxElectronics

@LenoxxAustralia
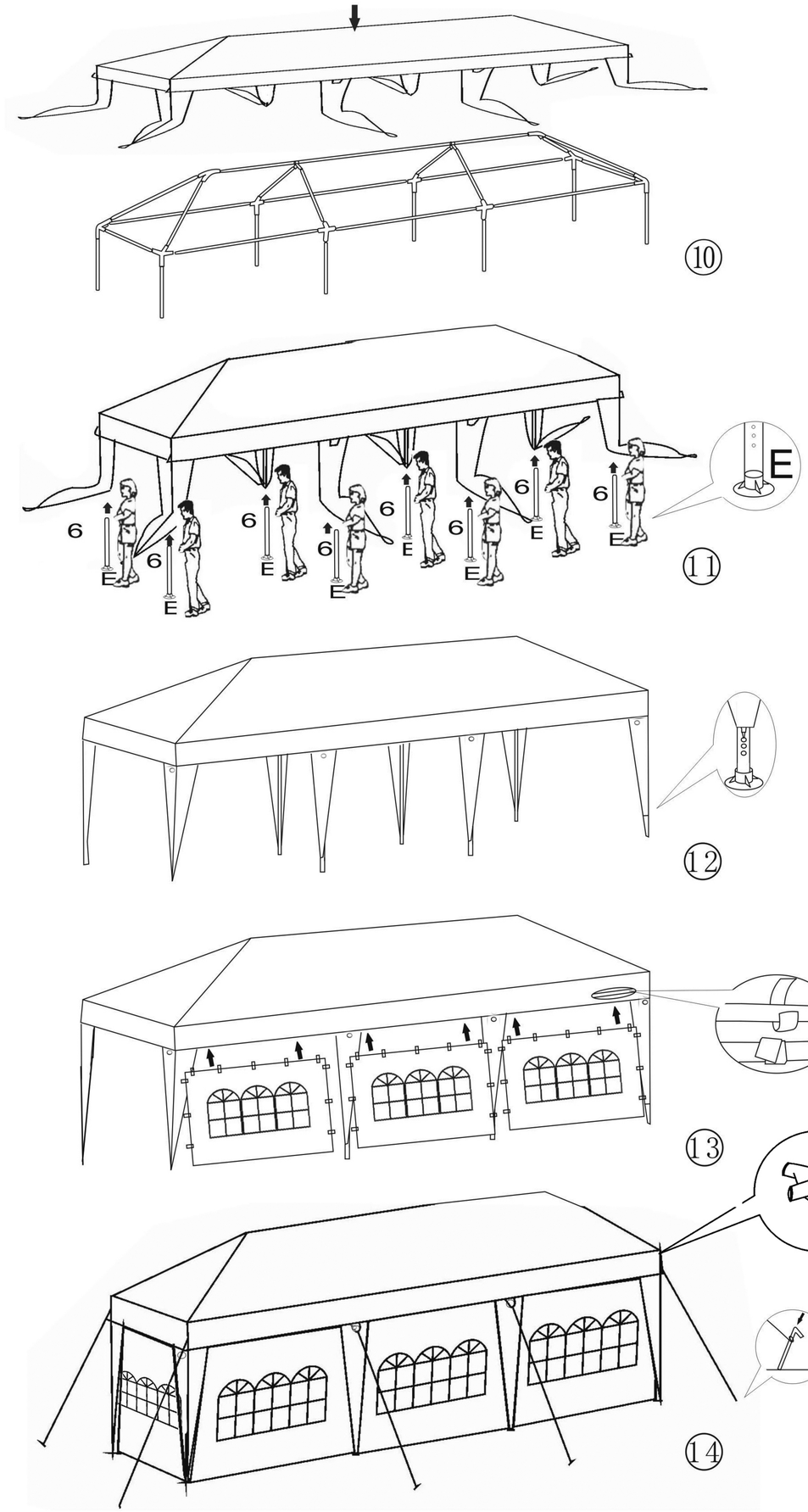
Product may vary slightly from image shown.